COUNTY SANITATION DISTRICT NO. 2-3

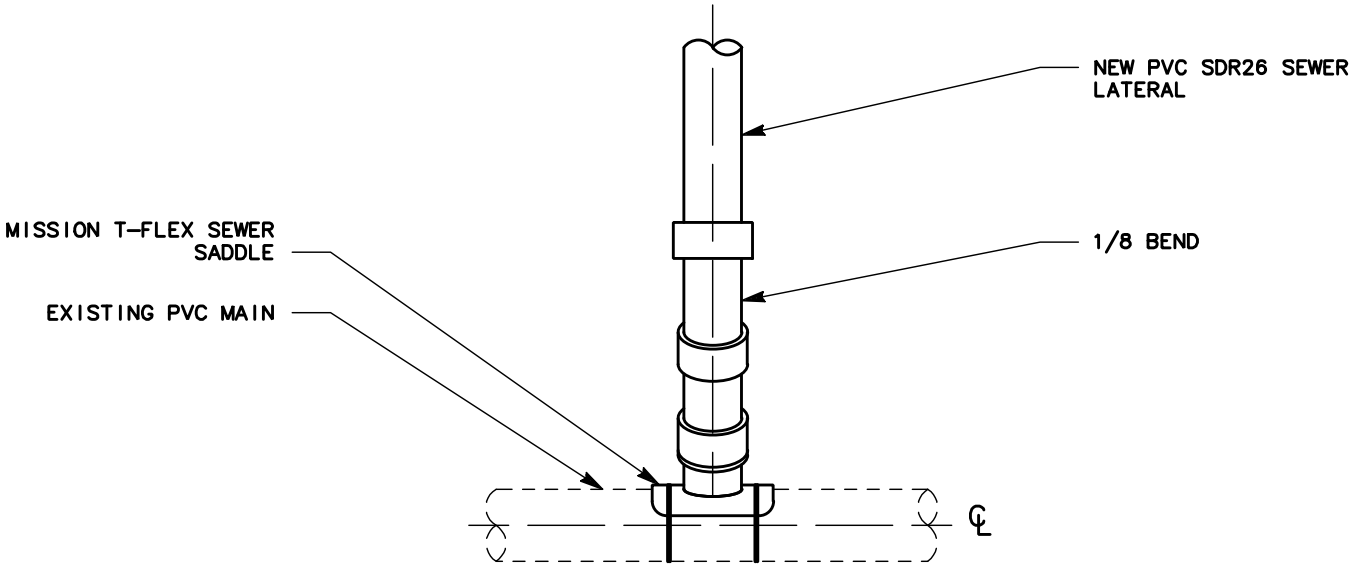

DETAIL B

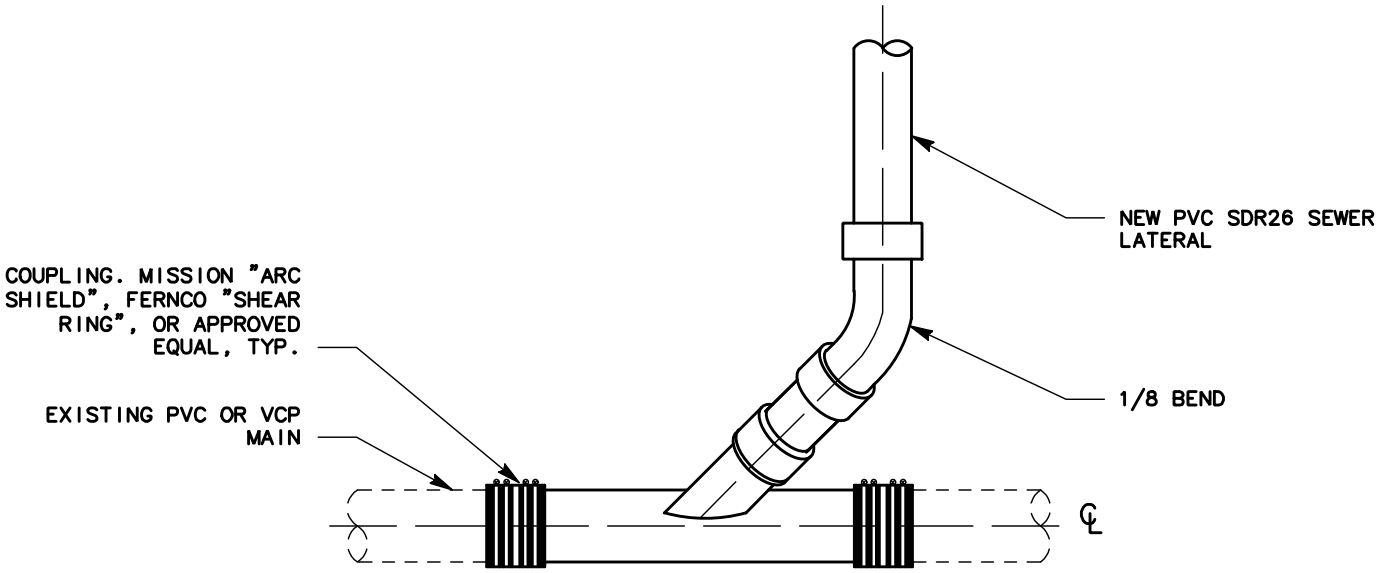

DETAIL A

NOTES:

1. DETAIL A – NEW LATERAL INTO EXISTING PVC & VCP (CLAY) SEWER MAINS
2. DETAIL B – ALTERNATIVE CONNECTION AS APPROVED BY THE DISTRICT

LATERAL CONNECTIONS TO MAINS

DETAIL **10**

DR. BY:	DATE:	CK. BY:	DATE:	APPROVED. BY:	DATE:
ED	06/01/2020	FQ	06/01/2020		06/01/2020